注: 未经允许禁止传输、复制、编辑该文档，以及利用其内容进行交流

REV	E.C.N NO.	CONTENT	CHK	DATE

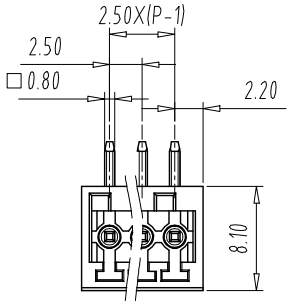

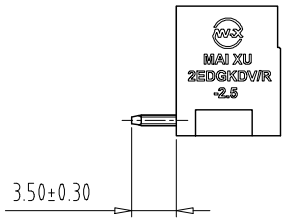

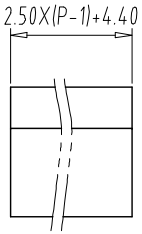

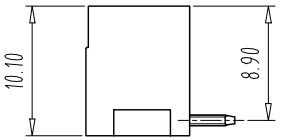

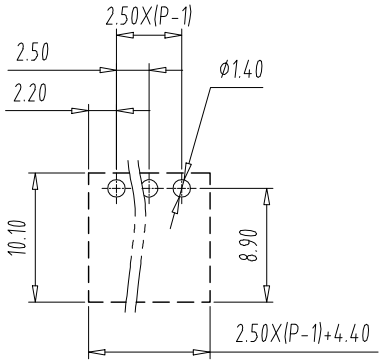

PCB Layout

NOTES1:

UL Standard

1.

Use group	B	C	D
Rated Current	5A	/	/
Rated Voltage	150V	/	/

2.withstanding voltage: AC1300V/1Min

IEC Standard

1.

Pollution Degree	3	2	2
Overvoltage Category	Ⅲ	Ⅲ	Ⅱ
Rate Impulse Voltage(KV)	1.5KV	2.5KV	2.5KV
Rate Voltage(V)	80V	160V	200V
Rate Current(A)	5A	5A	5A

NOTES2:

1.Housing: PA66 (UL94V-0)

2.Solder Pin: Brass (Sn Plated)

NOTES3:

1.Pitch: 2.5mm Poles: 02-24P

2.Operating temperature: -40℃～+105℃

3.RoHS Compliance

How to order

MX2EDGR - 2.5 - XXP - XXXX - XX - X

产品型号 间距 极数 颜色: 01:常规颜色 02-99: 定制颜色 Cu:铜 Fe:铁 A-Z其他定制

灰色:GY 橙色:OE
蓝色:BU 红色:RD
黑色:BK 透明色:TT
绿色:GN 黄色:YW
透明色:TT 白色:WE

Pitch Range In mm			Nominal Dimension Range In mm					— ⌒ ▱
TO 6	Over 6 TO 10	Over 10 TO 24	TO 30	Over 30 TO 60	Over 60 TO 100	Over 100 TO 150	Over 150	0.1/10 ∠
±0.15	±0.20	±0.30	±0.30	±0.50	±0.70	±1.00	±1.30	±2°

ITEM	NAME OF PART		NO. OF PART	Q"TY	MATERIAL		NOTE
DWG.	CKK	DATE	24.01.07	UNITS	MM	SHEET/OF	1/1
CHK.		DATE		SCALE	1:1	A4	
APP.		DATE		NAME	MX2EDGR-2.5-XXP		
CIXI MAIXU ELECTRONICS CO.,LTD. MAI XU 慈溪市迈旭电子有限公司				DWGNO.			